WESTERN UPDATE #70

THE WESTERN NEWSLETTER FOR MF, LF, AND VLF EXPERIMENTERS

Available for business-size 25 cent SASE's, plus $1 per issue (or $10 per year)
from: Jim Ericson, 226 Charles St., Sunnyvale, CA 94086-6063

ACTIVE EXPERIMENTAL BEACON STATUS (LIST COMPILED JANUARY 28, 1989)

FREQ(kHz)	IDENT	LOCATION	SCHEDULE INFORMATION
163.80	FPV	Granada Hills, CA	Weekends. See alt. freq. 182.62 kHz.
166.503	C	Near Morro Bay, CA	24h/7d.
169.94	NRE	San Diego, CA	24h/7d.
171.139	K	Mountain View, CA	24h/7d.
175.703	FAW	Orem, UT	24h/7d.
176.26	CO	Glenwood Springs, CO	24h/7d.
176.85	7FS	Belfair, WA	24h/7d.
177.75	CT	Pleasant Gap, PA	10 baud BPSK. Status unknown.
178.62	DJ	Los Banos, CA	24h/7d. Dave Johnson.
179.0	MPM	Salt Lake City, UT	24h/7d. ASCII/CW alternating 5 minutes.
179.54	WJ	Arleta, CA	On, but intermittent.
180.224	F	Los Banos, CA	FSK. By request.
180.80	XU	Sioux Falls, SD	24h/7d. BPSK/CW alternating 5 minutes.
181.17	IZJ	San Gabriel, CA	Daily. Silent 0700 to 1100 UTC.
182.62	FPV	Granada Hills, CA	Weekends See alt. freq. 163.80 kHz.
182.672	G	Palo Alto, CA	24h/7d.
182.88	H2	Descanso, CA	24h/7d.
183.160	PRK	Saratoga, CA	24h/7d. K6PRK.
183.544	MEL	San Jose, CA	24h/7d.
183.63	PLI	Burbank, CA	Big signal, but intermittent schedule.
183.74	ZI	San Jose, CA	24h/7d. Frank Butscher W6SZS.
184.016	EK	Sunnyvale, CA	24h/7d.
184.383	TI	Kingman, AZ	24h/7d.
184.39	HO	Pahoa, HI	By request.
184.46	B	Fresno, CA	24h/7d.
184.5	**TEXAS**	**NW of Ft. Worth, TX**	**24h/7d. Note QSY.**
185.0	ZYK	Redway, CA	24h/7d.
186.84	**BA**	**Lancaster, IL**	**24h/7d. Note QSY.**
187.0	ELU	Simi Valley, CA	24h/7d. Saturday and Sunday A.M. on SSB.
187.2	CAT	Cincinatti, OH	24h/7d. Dave Raney.
187.50	DCH	Berlin, MD	Schedule unknown.
187.77	AZ	Tucson, AZ	24h/7d. **Often silent 0400 to 0530 UTC.**
190.4	OHH	Richmond Hill, Canada	Occasional testing.
525.+/-.76	T (dashes)	Sunnyvale, CA	A2 mod 24h/7d. Ed Gelinas.
1619.92	D	Salt Lake City, UT	24h/7d morse/FSK. Mark Mallory.
1620.08	U	Salt Lake City, UT	24h/7d morse/FSK. Mark Mallory.
1624.75	CT	Pleasant Gap, PA	24h/7d. 5 baud CCW. Clint Turner.
1631.54	**A**	**Cleveland, N.C.**	**24h/7d. Ron Barlow. New Beacon.**
1637.93	RR (daid)	San Rafael, CA	Sunset to Sunrise. Steve McGreevy.
1650.62	G4	Palo Alto, CA	24h/7d. Herb Vanderbeek.
1650.67	TI	Kingman, AZ	24h/7d. Rex Wilson.
1655a	**EK**	**Sunnyvale, CA**	**24h/7d. Jim Ericson. New Beacon.**
1655.2	CO	Glenwood Springs, CO	24h/7d. Bob Cutter.
1661.35	U	San Diego, CA	Nites only. Steve Meyerpeter, KG6BY
1671.8	**WJ**	**Arleta, CA**	**24h/7d. W6FZQ Wallie Jones. New Bcn.**
1687.4	SD (daid)	Descanso, CA	24h/7d . Frank Cathell.
1688.2	TUS(daid)	Tucson, AZ	KD7QK. **0000 to 1400 UTC daily.**
1689.1	AZ(daid)	Tucson, AZ	Greg Farkas. **0000 to 1400 UTC daily.**

6 MORE SASES ON FILE

Non-Western listings are beacons currently being copied in the West, or they have SASE's on file with us.
Bold entries indicate recent changes, or new beacons. "a" is approximate.

EK NOTES/MAILBAG: This is the 70th issue of **Western Update**! The first issue was published by **Mike Mideke** in May of 1983. I picked up publication responsibilities in July of 1986 with issue number 33. Initially, this journal was specifically aimed at the 1750 Meter band...antenna and receiver designs, audio filters, listening tips and reports. Over the years, experimenter interests have branched out to examine various modulation schemes, propagation effects, Medium-frequency (FCC Part 15) beacon operation, and VLF/Whistler phenomena.

Have we come full-circle? Some of the experimenters who were active back in 1983 are now inactive (did they burnout, or did they simply explore the possibilities to their satisfaction, and then move on?). Without question, the general range of experimenter interest has broadened since 1986. As an editor/publisher, I see this as a healthy progression, but sometimes it is hard to keep up with! Where we go from here is pretty much up to the readership (i.e., don't depend on me for direction!).

Information about VLF/LF experimentation has always been scarce. The **Western Update**, The **Northern Observer,** and the **LOWDOWN** were born as a result of this vacuum. Unfortunately, none of the experimenter publications are significant enough to be available in libraries, so access is by "word of mouth". Back issues of the publications are difficult (or impossible) to get. In the case of **Western Update**, I have a "no reprints available" policy...simply because I don't have time to be in the reprint business. A shame that all of that technical information in Western Updates #1 through #70 is not available to the newcomer! To make up for this deficiency, we (as editors) tend to repeat ourselves a lot. The weakness with this approach is that we probably bore the "mature" experimenters by repeating articles describing the basics of the hobby.

A couple of years ago I put together a stand-alone 1750 Meter "Resource Handbook". It was about 40 pages long, and covered the basics of listening, transmitting, FCC rules, possibilities and expectations. I sold it at $4 to cover costs. This was well received, but I have not had the time to keep it up to date. It would be a real service to future experimenters if someone out there would volunteer to pick up the torch on publishing such a handbook.

Speaking of "going back to basics", in this issue we are including an article by **Dave Raney (CAT)** titled, "Finding LowFER Beacons, A Real-Time Analysis." Dave's writing effectively captures the essence of this crazy hobby!

Ken Cornell was kind enough to submit an article for this issue titled, "Simple Basic Frequency Measuring Devices." And thanks to **Dave Johnson** for his one-pager on a "Simple Morse Ident Keyer". Fine contributions such as these are what keep the **Western Update** going!

In order to make everything fit in this issue we left out the active subscriber name and address listing. For reference, changes to the previous list in WU#69 include: Add **David Burr**, Ohio; **Milt Wu**, NM; **Daniel Aldrich**, CA; **David Strong**, AZ. Delete **Al Taylor**; **Jose Otacilio P. de Sousa**; **Glen Smith**; **Stan Forsman**; **Bob Horton**. Note address change for **Ron Barlow** --- now is 14245 Cool Springs Road...same city and zip.

Wit Wizniewski, a graduate student from Tucson, telephoned a few days ago to advise that he plans to have a LowFER beacon (either **Ø** or **W**) on the air by springtime. Wit is currently working on building a keyer.

The first report of a MedFER beacon being heard in Hawaii! **Rex Wilson's TI** MedFER (1650.67 kHz) was heard on December 11th at 1300 UTC in Hawaii by **Sheldon Remington**. The report was "a steady signal, but severe static crashes". This report coincides with an extraordinary VLF opening reported by **Mike Mideke** of San Simeon, CA.

Ken Cornell of NJ writes, "An article on a shortwave converter in the Oct. '89 issue of Monitoring Times by **Rich Arland** using the Signetics NE602N IC caught my eye, and felt it should be of interest to the experimenter. Besides being the "guts" of a good converter, it also is a double-balanced mixer/oscillator, and appears to be a much simpler circuit for SSB or DSB than the MC1496. If and when I come up with something on the NE602, I promise that I will send it to you."

FINDING LOWFER BEACONS, A REAL-TIME ANALYSIS

Dave Raney - WC8E/CAT-187.2
4128 Linden Ave., Cincinnati, OH 45236-2426

This article is about both ends of the 1750 meter activity, finding beacons, and putting a beacon where it can be found. Several articles on this subject have appeared in The LOWDOWN, the WESTERN UPDATE, and probably several other amateur radio and SWL publications. Mitchell Lee, Mike Mideke, Sheldon Remington, and others before them, and before my own exposure to LF, have published 'how-to' articles for extracting signals from the man-made bedlam that usually occupies the 160-190 KHz experimenter band, otherwise known as the 1750 meter band. Jim Ericson, publisher of the WESTERN UPDATE, offers an excellent source book containing an enormous amount of background and 'how to' information.

Yet, every few issues of THE LOWDOWN, there's a letter from someone who's interested enough to have accumulated substantial equipment and years of listening, that has yet to hear his first LOWFER beacon.

From my own experiences, and others that have been passed along, the following pattern has emerged.

- Person feels they already own the best possible equipment (me too).
- The requirements previously presented must surely be exaggerated.
- What do I need a converter for? My new digital receiver covers right down to zero KHz!
- Power line noise? But I have a 16-pole AM crystal filter!
- My Super Skyrider has PLENTY of dial resolution!
- I use a shielded ferrite loop inside my mobile home, and it works fine for BCB dx-ing, therefore (I decree that) it must surely be adequate for LowFER listening.
- What do you mean, my HF antenna ground isn't good enough? It has three or four 20-foot radials made of bell wire (even wire-wrap wire).

This sort of comment is common, and relates to suggestions or ideas that simply weren't understood, or didn't get fully developed, or properly employed. The following discussion outlines some of the things that I and others have had to unlearn, relearn, and discover anew, as the light finally comes on!

THE SIGNAL

Keep in mind that you're not looking for NWA, or TUK, or Omega stations. Those stations not only have power outputs ranging from thousands of watts to millions of watts, they also generally have antenna systems that have been meticulously designed and installed, and painstakingly tuned to deliver every possible watt. The best efficiency LowFER signal is going to be 30db below ONE WATT! That's 1/1000th of a watt! TUK runs 4,000 watts out, or 66db more power than a really good LowFER beacon. Example: If you live in the midwest, and you can barely hear TUK-194, chances are slim to none that you'll hear WI or TH. On the other hand, if TUK buries your signal strength meter, you have a fair chance of hearing a LowFER beacon.

THE COMPETITION

Characteristic to the 1750-meter band, is an appalling electrical noise level that can be heard with even mediocre receiving systems (receiver, antenna, ground system) simply by tuning over the range of 140 to 190-kHz. As a general rule with occasional exceptions, if you don't hear this noise level with imbedded power line carriers (PLC's), your receiving system is not as good as it could be. These PLC's can be anything from a just-audible heterodyne, to several millivolts (pinning the S-meter) in strength. Some beacon operators compound the problem by locating their signal smack dab in the middle of your worst PLC!

EVERYBODY'S PROBLEM

Coordinate frequencies? On 1750 meters? You're kidding, of course! NO, I'M NOT KIDDING!!! The biggest problem, as I see it, and I'm guilty too, is communication, or rather lack of it, between LowFER beacon operators and listeners (sometimes other operators). Frequency lists are printed in THE LOWDOWN, the WESTERN UPDATE, and THE NORTHERN OBSERVER. Beacon operator addresses are periodically listed in WESTERN UPDATE and THE NORTHERN OBSERVER. Let the beacon operator know about your heterodyne problem, and where (nearby) there may be a frequency clear enough for reception. It is highly probable that a temporary change could be made to help you, the listener, find that LowFER signal. We all like reception reports. True, everyone can't move, because of their particular frequency control situation, but the majority are synthesized one way or another, and can move a few hundred cycles. You can bet your last transistor that I'll move on request.

A few years ago, practically everyone was single-crystal controlled. While this is still practical for beacons established on known clear frequencies, a newcomer needs to be better prepared to move around. We must remember that this Part 15 operation is on a non-interference basis as far as our operation is concerned, but we operators have NO protection or consideration from licensed or unlicensed interference. Nowadays, a beginner would be well advised to start out with a stable VFO that can be divided down (idea articles in THE LOWDOWN), and buy a crystal later when a frequency has been selected. One item, available from Fair Radio Sales, Lima, OH, is a T195 transmitter LMO, easily used as-is, or converted to solid state as described in a past LOWDOWN article.

I used an ART-13 VFO for two years, until confidence was established that I could be heard. Then, instead of buying a crystal, I built a synthesizer like THE LOWDOWN article by Max Carter. It cost less than two or three crystals, and I can move anywhere in the band, in 25-Hz steps. Another approach is to build a two-crystal mixer, or synthesizer, that uses surplus crystals in the 3- to 8-MHz region (see Ken Cornell's Scrapbook), with trim capability to allow 100- to 200-Hz frequency adjustments. BA uses this method, and may be near making his second frequency change to avoid a heavy PLC that is slowly moving up to his frequency.

What seems to be the biggest problem, is simply poor or no frequency planning or research by some beacon operators. It just happens due to lack of input information, or not believing the information available. Even as this is being written, there are three known east coast or midwest LowFER beacons on the same frequency, 187.5-KHz. There's also a very strong PLC on the same frequency. I have it, BA has it, and I'm sure that others have it. At my suburban Cincinnati location, this PLC is a steady S9+40db. At BA, it comes and goes, but it's there most of the time. During a local null, BA was listening for DCH, some 600 miles east, and discovered another station on the same frequency that we had thought was off the air, since last reception was the summer of 1988 (no communication)!

I know of one other station on the same frequency, about 300 miles from Cincinnati, or 500 miles from BA, that also occupies 187.5-Khz, and doesn't understand why no one has reported hearing his beacon. After all, 8LXJ reported hearing him on another frequency, using null steering receiving antennas and a receiver with 10-Hz bandwidth (not a misprint). Fact is, we don't all have extremely narrow band equipment, or the room for antennas that can be installed in either a clear or quiet location! The point is, frequency selection can severely compound an already bad situation.

Lets take a look at how a couple of people I've checked out, got into the LowFER activity:

Electronically inclined, sometimes highly skilled, Ham or non-ham SWL, often related to a ham, sees LF article in Popular Electronics, Radio-Electronics, or one of the many amateur publications. Person reads article, decides "hey, I can build that", or "I'll buy one of LF Engineering's or Palomar Engineering's transmitters and put it on the air! How could I have a problem with something so simple?" Some kits come with a crystal, some without. There is a tendency to use the crystal supplied (same frequency to every buyer of a similar kit), or use one purchased from a flea market that can be divided down to 1750 meters. Actually, the kit-supplied crystal is furnished so that the transmitter can be operated and used to set up the antenna system in preparation for serious operation.

It is fact (ask Ken Cornell) that some people are interested enough to want to put a LowFER beacon on the air, who themselves have little or no receiving capability at LF. And, that's OKAY, until they get a receiving system up to speed and sensitivity so that they might really analyze what's on their transmitting frequency. "Gee whiz, where'd that heavy RTTY station come from?" "What's that repeating hissing sound?" Hi, guys! Meet GWEN, the network of military packet stations that have begun sharing our 30-KHz band! Putting a LowFER beacon on the air between 160-KHz and 175-Khz is sure to meet with some disappointment. The authors writing the how-to articles didn't mention GWEN, foreign broadcast, RTTY, fluorescent lights, neon advertising signs, mercury vapor security lights, power line carriers with S9+60db signals, etc. The articles emphasize 'license free' and 'have fun'. Boy, tell me about having fun! I have been unable, for the most part, to find any of these authors successfully participating in any LF activities. I wonder why? NOTE: Most east coast and midwest operators have shifted frequency above 175-KHz to avoid GWEN interference.

So, how were you to know? Try this: THE LOWDOWN has carried articles about noise reduction and frequency planning both before and after 1986, when I became a member of LWCA. The intent of some of that guideline information is repeated here:

- Avoid incremental frequencies - (examples) 185.00, 185.1, 185.5, etc., unless you know that particular frequency to be clear, because of PLC carriers on those frequencies. Check with folks who may be in a position to hear you, and find out what THEIR PLC condition is. It's not necessarily what will interfere with the beacon operator's listening, but the distant station's conditions.
- Avoid frequencies below 175-KHz because of GWEN operations, if there is serious interest in anyone else hearing your beacon.
- Avoid TV birdie frequencies around 173- and 189-kHz. Although I don't have a problem at CAT, your neighbor, or someone else in your own house may be operating a TV that can give you fits when listening.
- Contact other operators by mail or telephone to find out their situation. Some beacon operators are not hams, and do not participate in the daily or weekly LowFER nets. These people want to hear from you as much as you want to hear them, and are generally willing to help out in whatever manner is possible.

THE ANTENNA

Almost any good outside receiving antenna will work well, as long as it's located away from power line noise areas. Tuning the receiving antenna to resonance can be a real help, to the tune of about 30db, and dramatically improve the signal to noise ratio. Or use some sort of matching network. Ken Cornell presented a clever tuner constructed from a tapped RF choke. At LF, an RF choke can be an effective loading coil. Keep in mind, that antenna tuners don't necessarily resonate an antenna system, but only match it to the feedline. A poor antenna is still a poor antenna! Several commercial tuners are available, but choose carefully, as some of these are not intended to work well at 1750 meters. A time-tested observation is that vertical antennas usually collect more man-made noise than horizontal antennas. The key word here is - usually. Don't assume, test! Your particular setup may yield opposite results, due to noise pickup from a nearby fence, power line proximity, and other mysterious reasons. Install your proposed LF antenna in the quietest possible location. A tour through your yard or neighborhood carrying a sensitive LF receiver can be a great help. Do this survey during times that you would expect to be operating (listening). Also do a noise tour of your neighborhood, a couple of blocks in all directions. You'll soon be acquainted with every cheap light dimmer, aquarium heater, cheap TV and noisy doorbell transformer in your area. This type tour at the author's location turned up a noisy traffic light controller, loose power line lightening arrester hardware, and a bad power transformer behind the local building and loan office.

Randy McCoy (XR), in Utica, Michigan, is unable to listen during the afternoon or evening, because of the local power company's installation of noisy peak load controllers on electric water heaters and other appliances. So Randy listens after 2AM! I've personally witnessed this phenomenon, and the noise level is incredible.

Shielded receiving loops may help quiet some of the man-made noise. One point that seems to be taken for granted by designers and writers, and not mentioned, is that a shielded loop operated close to the ground generally requires a good ground screen to be really effective. I fooled with several shielded loops without ground screens over the past three years, and all I was able to copy was noise! Some listeners report good results when mounting their active loops on elevated metal structures, such as a tower about thirty feet high. This seems to provide adequate separation between the loop and power line ground currents. Lack of adequate inclusive background information is a disservice to the reader, especially if the object is to get more people interested in this type of activity. One would be surprised how much reference material generated before 1970 simply IS NOT AVAILABLE at the local library. Obscure but important technical points should be included as part of the article, and not simply be listed with the "interesting additional reading". Even unshielded loops may be useful in nulling noise, used alone or with other antenna(s) and a phasing (null-steering) circuit. Research in this area could make you famous and very, very popular.

THE GROUND SYSTEM

Receiver noise pickup from the antenna and radio ground can be reduced in a variety of ways. Using a 1:1 torroidal transformer to provide isolation between the electrical and radio grounds can help. Install more than just a ground rod for the signal gathering duties. Try tying into the domestic water supply or electrical system grounds. Test all these for noise pickup, and stay away from the worst ones. The electrical ground may be a disaster! Try to make the quieter ones work. Mitchell Lee authored a LOWDOWN article titled "How To Get The Most Out Of Your Antenna And Receiver", which has been an invaluable help. Use brute-force power line filters, noise blankers, whatever it takes.

Transmitting antenna articles, of the type that accompany the afforementioned "Have Fun On LF" articles are fooling the newcomer with statements that an extensive ground system is not necessary at LF. Nothing could be further from the truth. A simple ground rod or half a dozen radials may provide some lightening protection, but that's about all.

A good current-returning ground system is absolutely essential in transmitting a respectable signal. If you have swampland, OKAY. I put down 24 60-foot radials of No. 18 wire, and improved my antenna current only 10 milliamps over the 55-milliamp reading using only a single copper rod for a ground. Installing chicken-wire mesh instead of hookup wire provided a 100 percent improvement in antenna current. System resonance remained unchanged! Ground system losses at LF are substantially higher than most folks want to believe, especially those that haven't read Terman's excellent work published in the 1950's. Tests run on NDB antennas that I maintain indicate up to four times higher impedances (read: ground losses) at LF than at their tuned operating frequencies. My own system could stand another roll of chicken wire, arranged to fill some still-open area around the antenna base. How long should a radial be? Experience has proven that a little more radial length than antenna height is the most cost-effective length. Add to that figure, any tophat diameter plus 50 percent. For a ten-foot tophat, add 15 feet of radial length under the tophat radial, if tophats are individual radials. Wire size? As large as available (without ruining the budget). Wire gauge ampere ratings don't mean much at our power levels, as No. 30 wire-wrap stock will satisfy the divided current requirements. What's not listed, is how much skin resistance a given wire size presents to LF RF. Stranded wire has more surface area than solid wire of the same size and somewhat lower RF skin losses. Litz wire has even lower losses and more surface area than stranded wire. Chicken wire for a ground screen is really getting serious (desperate), and may well be the most cost-effective improvement you can make in an antenna system.

Tophats on transmitting antennas help hog current up the antenna. Current flow is what makes an antenna radiate. A 30-foot vertical with a 20-foot radius tophat will beat a 50-foot vertical with no tophat.

Copper pipe is better than plated steel rods for grounds. All joints MUST be soldered for weather survival. Burying radials any depth produces measurable losses, and should be done as a last resort, unless safety is a factor. Elevated radial systems are very low loss, and techniques are diagrammed and discussed in Laport's Port's Radio Antenna Engineering, in both Low Frequency Antennas and Medium Frequency and Broadcast Antennas chapters.

THE RECEIVER

There seems to be an overall lack of appreciation of necessary receiver performance required among both beginners and experienced operators. Rick Wright (1SUN) and I discussed this topic during my visit to his location in October, 1987. Our conversation turned up many similarities in contacts with other operators, some who are hams, and some who would be LowFERs, but for their inability to hear any other LowFER transmissions. A local ham came over to check out my receiving setup, and proudly brought along his vintage AR-88 for comparison. Performance was well below adequate, as was the 10-KHz dial resolution. Another brought over a stock R-71A. Dial resolution was OK at 100-Hz, but it still required a good bit of guesswork as to just where you're actually listening. The R-71A sensitivity was very poor with direct input at LF. Even the variable bandwidth feature left a lot to be desired, due to the resulting I-F shape factor. Signals that were barely audible on the R71A were 579 to 589 on my old 75A-3 and homebrew converter, using the same antenna. Another called me on the telephone to report receiving my LF signal a mile away, about an S-2. He thought that was great reception! BA copies the same signal 200 miles away at a reported 579.

There are three problems here, relating to useful performance.

(1) Receiver dial resolution
(2) Receiver useful bandwidth (selectivity)
(3) Receiver sensitivity

Dial resolution should allow eyeball interpolation to 50 or 100 Hz. Otherwise you're as good as blind, unless a strong known signal is nearby to use for reference. If a digital receiver only tunes in 1-Khz or 100-Hz steps, it may be next to completely useless for serious LowFER hunting. Alternately, a surplus LM or BC221 frequency meter can be used to spot a LowFER frequency. A back issue of THE LOWDOWN presented an article on using a surplus T195 LMO and frequency divider chips to provide spot frequencies. Precise adjustment requires a frequency counter with 1-Hz resolution.

Inexpensive used receivers that are useful in this regard, are:

- Collins, 75A-series, or S-line - Stable LMOs, 1-Khz dial resolution, easily readable to less than 100-Hz, special crystal filters occasionally available down to 100-Hz bandwidth. My 75A-3 ($100 at the Dayton Hamvention) has a 300-Hz filter. These receivers may also feature a Q-multiplier or tunable notch filter. I have a ($2 at the Dayton Hamvention) used Heathkit QF-1 Q-multiplier installed in my 75A-3. There are times when I need ALL this selectivity to pull out a signal!
- Collins R-390A - all of the above comments apply. Some units have selectable bandwidths down to 100-Hz. Has a mechanical digital readout to less than 1-KHz. Heavy.
- Drake R4B/C - filters available down to 125-Hz. These really work. Also feature variable bandwidth tuning and 1-KHz direct readout.
- Hammarlund HQ-100 series - those with filters are usable, but heavy. Those without crystal filters aren't any better for serious LF work than a transistorized SWL receiver from Radio Shack.
- Heathkit SB-300 series, or SB-100 series transceivers - very stable LMO, 1-KHz dial resolution, noise limiter, and 250-Hz filters are available. Maybe a little low on overall gain, but useful with an 8-pole Fox Tango filter installed. Gain can be added downstream of the filter.
- National HRO series - poor dial resolution, but useful. Selectivity characteristics are OK for ham-band work, but leave a bit to be desired at LF, unless a good Q-multiplier is used.
- Rycom - good filter (100 Hz), needs some front-end matching. Has fair tuning ratio and dial resolution - 1-KHz divisions on 1750 meters.

And there are many others, too numerous to mention. The point here, is that without crystal filter type selectivity, the average LowFER signal can be very hard to pull out, considering the antenna it's tied to. The extent to which one is willing to go varies according to desire and creativity, as much as cost being a factor.

But wait a minute! Most of the receivers mentioned don't even cover LF. I was going to discuss that, and this is as good a time as any. Most receivers that tune down into the LF region do so at the cost of sensitivity. Some specifications suggest that an LF signal needs ten times more strength to provide the listener with the same signal plus noise to noise ratio found in the 3-4 MHz ranges. Although there are a few exceptions out there, you are usually better off using a frequency upconverter, and taking advantage of better front end characteristics. Really good, broadband front ends that don't swallow a major portion of the LF signal are both rare and expensive, and not generally found in consumer grade equipment. The older surplus equipment generally had tuned stages, which greatly improved their sensitivity. A fair number of those units were also TRF's and had regenerative detectors.

USEFUL BANDWIDTH, OR SELECTIVITY. Authors of a great many articles sort-of assume that the reader understands what these terms are all about. As a result, a lot of communication is lost in the assumption. More is not better. You need the narrowest attainable bandwidth. Wide I-F's allow unwanted signals to operate the receiver AGC or AVC circuits. This causes the receiver gain to be reduced below the required levels. Control of the RF and I-F gain is very useful in reducing unwanted signals at any I-F bandwidth. Audio-derived gain

control is not good here, unless you also employ a narrow audio filter ahead of the audio stages and gain control circuits.

The selectivity or bandwidth problem is usually due to poor filter choices available in commercial consumer grade equipment. Manufacturers install an AM or SSB filter that most buyers will be happy with, which helps to keep the cost of a radio within reach of modest budgets. Sometimes an audio filter is included, or available as an accessory that can be added. What is really needed is "hostile environment communications quality selectivity and sensitivity". A new radio being purchased from places like Grove Enterprises or EEB can have the recommended narrow filters installed before shipment if serious LF activity is planned. These people understand the problem, and are willing to cooperate with customers needing better performance.

How do you tell if you have enough selectivity? If you can't separate a NDB carrier from the identifier, you don't have enough selectivity for serious LowFER-ing.

Variable bandwidth, or passband tuning, generally leaves a bit to be desired. YHO's Drake TR7A is an exception. This can be supplemented with a good, NARROW audio filter.

Useful bandwidth includes the audio stages of a receiver. An active filter can be built with 30-Hz bandwidth (Buttschardt), that produces astounding results when installed in a receiver immediately after the detector, and before ANY receiver gain is added. 30-Hz passive filters can also be built using the familiar 88-mHy torroids. Proper application of any of these can produce incredible improvements in system performance.

SENSITIVITY. Several articles have appeared covering regenerative receiver projects. These can provide both the needed selectivity, adequate sensitivity, are inexpensive to build, and can be powered by 9-volt transistor radio batteries. For those with time to invest, this approach can be very rewarding, as well as inexpensive. See Ken Cornell's Low Frequency Scrapbook. This is required reading for beginners like me, providing good perspective. None of Ken's presentations are overkill, nor is their integrity suspect.

Another approach is to use a regenerative stage ahead of the receiving setup. Be careful here, and keep the gain down. Even cheap receivers generally have adequate gain, and poor front-end designs can be overloaded. Crystal filters are easily overpowered, too. An RF gain control is useful to reduce this type of problem, sometimes with remarkable results. Avoid adding gain ahead of selectivity.

FINAL THOUGHTS

Use of these various items and schemes requires some learning of technique, and being able to develop the ability to blend the various useful characteristics to produce the desired results. Evaluate your techniques and equipment continuously, and be sure that all your progress is in the desired direction! Some ideas work good at one time, and poorly at other times, depending on conditions. Be prepared to alter tactics accordingly.

Comments, corrections, and new information is always appreciated. For answers to specific questions or article reprints, please include SASE.

MORE EK NOTES/MAIL: **Ron Barlow** writes that, "After a period of absence, my 1631.54 kHz "**A**" beacon is operational. I've been copying **DAW** consistently with a very fine signal over a 110 mile path. I was very surprised to learn that Jim is using an H-field radiator for his xmit antenna. I have also been hearing **ABC**, as well as a mystery beacon, **SBT**, on approx 1619 kHz.

Brice Anderson of Illinois reports that he has shifted his LowFER beacon up slightly to 186.84 kHz to avoid a new PLC (powerline carrier). Brice says, "When I recently rebuilt my aluminum LF vertical I put it together with stainless steel bolts, washers, and nuts. I also ran a #12 copper wire all the way from the top to the bottom, connected at each section. Now I'm free of the birdies that covered the ham bands with the old antenna. I guess I had dissimilar metal rectification at each joint, hi!" Brice reported that on January 6th at 11:40 P.M. CST he copied **3OHH** in Canada for the first time. He says no Western beacons heard yet, and LF condx have been poor.

Wally Jones of California notes, "I got my MedFER beacon on 1671.8 kHz. The ident is **WJ**, and it is keyed simultaneously with my **WJ** LowFER beacon."

Bob Costa of Redwood Estates, CA (near the October 89 earthquake epicenter) checked in to say, "All of us are still shook up from the quake. We still have no water and may not for quite some time. So, to sum it up, LowFERing and amateur radio have taken a back seat."

Frank Bauer of Felton, CA (also near the quake site) wrote, "I am sure that you got over the earthquake jitters like we did. Once in a lifetime is enough! No significant damage here, but oh what a mess the quake make of my electronic jungle. Everything has been restored to a state of 'normal disorder', so there is no problem."

A quick note from **Mark Mallory** of Utah indicates that his **MPM** and **D/U** beacons are still operating as ever.

Bob Cutter of Colorado writes, "In response to **Steve McGreevy** I put my 1655.5 beacon back on. I copy **TI** regularly, but no QSO yet, however." Ed. Note: We've had reports of Bob's beacon being closer to 1655.2 kHz. Give that a try, and send him your report!

Boyd Skillin of Fresno, CA received a seemingly serious QSL for his LowFER beacon "**B**" from a fellow in Berlin, MA, but Boyd has serious doubts! Boyd also sent along a recommendation for a NOVA episode on Public Television titled, "The Schoolboys Who Cracked the Soviet Secret." It's a reenacted classic case of classroom detection when English schoolboys track down a secret Soviet launch site.

Max Carter of Wyoming wrote, "Please remove **MAX** (175.225 kHz) from the active list. On January 2nd a severe ice/wind storm brought down the transmitting tower. It's now just twisted steel. Probably the earliest I could bring it back on line would be July (one of the few months the wind doesn't blow around here). Since the beacon has already fulfilled its experimental mission, there's a real good chance I won't put it back on -- at least not to its former glory. Kinda sad. it's been an interesting 3-1/2 years."

Greg Farkas is hearing LowFERS **H2** and **TI** (early December). Greg routinely copies **TI** MedFER, and **SD/U** on good nights.

Allan Egleston sent a news clipping, dateline Clam Lake, Wisconsin, reporting that the $400 million ELF system in the nearby Chequamegon National Forest has quietly gone into action. The antenna is two strands of cable, 15 miles long, hung on wooden poles. The project, "...which allows message traffic to missile-equipped submarines patrolling deep waters around the world went through, despite years of protests based on fears that the radio waves would fry fish in nearby streams and produce two-headed squirrels." Jeez, if they'd wanted hard data on the effects of low radio frequencies on people, they shoulda asked the experimenter community! We're just as normal as can be!

Dave Raney of Ohio notes that he is working to cut ground losses on his **CAT** beacon (187.2 kHz). He says, "The new flattop antenna has had a 50% area increase, with a generous increase in antenna current when the ground freezes. I guess I'm being told that my chicken wire ground screen still has some room for improvement!"

MORSE IDENT KEYER

23 Nov '89 D.E. Johnson

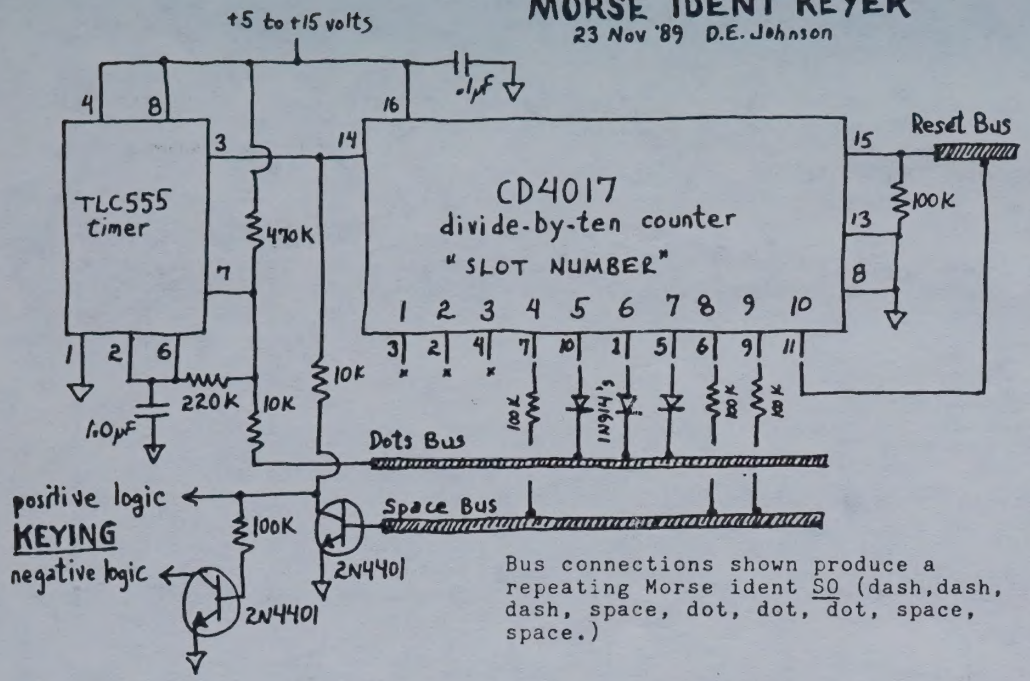

Bus connections shown produce a repeating Morse ident SO (dash,dash, dash, space, dot, dot, dot, space, space.)

This Morse ident keyer can do any single character, most 2-character and some 3-character combinations. All parts are available from Radio Shack.

The CD4017 steps through a 1 to 10 sequence, then repeats. A 1N914 diode connected from the pin corresponding to a particular slot number to the Dots Bus gives you a DOT. If the pin is left unconnected, you default to a DASH. If the pin is connected to the Space Bus with a 100K resistor, you get a SPACE. If the pin is connected to the Reset Bus the circuit immediately returns to time slot #1. If no pins are connected to the Reset Bus the circuit will time out all ten slot numbers and then repeat. Short (intersymbol) spaces are automatically timed.

This circuit was adapted from the Ken Justus circuit on page 66 of Ken Cornell's 6th Ed. Low and Medium Frequency Radio Scrap Book.

SIMPLE BASIC FREQUENCY MEASURING DEVICES

The Basic Absorbtion Frequency Meter and Updating the Grid Dipper

Ken Cornell (ARS W2IMB)
225 Baltimore Avenue
Point Pleasant Beach, NJ 08742

Back in 1970 when I first became interested in the Low Frequencies and particularly in the 160 to 190 kHz band,I was kind of lost as to just where the band was as to tuned circuits, etc.

I had a friend of mine that worked in the electronics deptartment of the Portsmouth navy yard. He calibrated a simple absorbtion frequency meter (also called wavemeters) and from there in, I was in business.

Maybe with all the super dooper electronic devices we have today, we are getting away from the basics ?

Let us take a look at a simple absorbtion Freq. meter. It is nothing more than a tuned circuit with a diode connected to a reasonably sensitive microammeter. I am sure that most radio buff's have a VOM with at least a 200 µA range. 50 to 100 µA is even better.

Fig. 1 shows the circuit of a simple meter. When the coil (L) is coupled to an active L/C circuit and tuned to the same frequency, the meter will register the basic frequency. The 10 K potentiometer (R1) is used to control the sensitivity.

By adding an antenna (usually a short whip) it can be used as a field strength meter. It is also a handy device for checking on harmonics.

Another extremely handy device, that used to be called a "grid dip meter", is used to check resonant circuits. In the old tube type grid dip meters, when the circuit is in an oscillating condition, the grid current is relatively high. If the oscillators coil is coupled to another resonant circuit at the same frequency, the other tuned circuit will "load up" the oscillator and the grid current will fall. Thus the term "grid dip".

The same basic circuit idea can be conviently used with the substitution of one of the common FET's such as the MPF102. I built one back in the mid-70's using one of the old type Motorola FET's and it really was of immense help in developing circuits. See Fig. 2 for a slightly up-dated version.

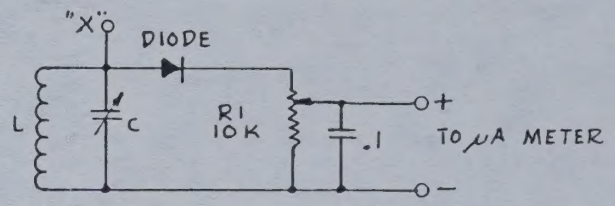

Fig. 1
Absorbtion Frequency Meter

In Fig. 1, The tuned circuit L & C should be resonant througth the desired frequency range. I suggest the use of a germanium diode as they appear more sensitive than the other types. The 10 K potentiometer is used as a sensitivity control for the microammeter. The meter can be external or built in to the device.

Fig. 2 is the circuit for the Gate Dip Oscillator

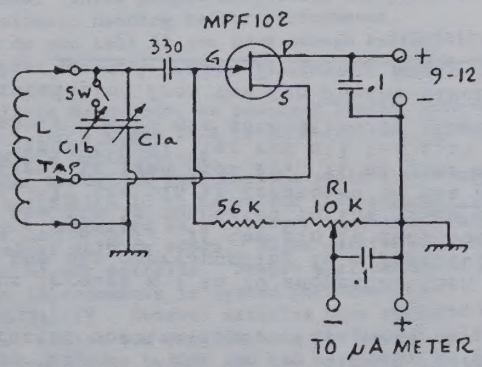

Note:- The "L" Coil Tap should be approx. 1/4 the number of turns up from the ground end of the coil.

Fig. 2
Gate Dip Oscillator

As in the Absorbtion meter Fig. 1, Coil L and its tuning capacitor Cla & Clb has to be resonant through the desired frequency range. I used a two gang BC superhet variable capacitor. The smaller capacity of the two gangs is used for the medium freq. range. I SPST slide switch is used to engage the larger capacitor across the smaller size for the low freq. range.

The 10 K potentiometer is used for setting the meter to full scale if a very sensitive meter is used. Depending on the meter scale, Rl may be eliminated and the meter connected in series with the 56 K bias resistor to ground.

I suggest the use of plug-in coils as each individual coil can be tailored to suit the frequency range desired. The coil for each of the meters should be physically positioned from the devices enclosure to permit close coupling to the test inductance.

There are other uses for the meter such as a signal generator and I suggest that an article by Doug DeMaw (W1FB) in the Jan. '90 issue of the Monitoring Times be reviewed. It is titled "Dip Meters and How to Use Them". There is an error in the editing as Fig. 3 is shown as a repeat of Fig. 1 and not on how to couple same to toroid coils. Link coupling has to be used.

In Fig. 2, a frequency counter can be connected to the Source of the FET for an accurate frequency read-out.

If you do not have a source for plug-in coils, they are easy to make as shown in Fig. 3. A pill bottle (plastic) courtesy of your local friendly druggist can be bolted to an octal plug.

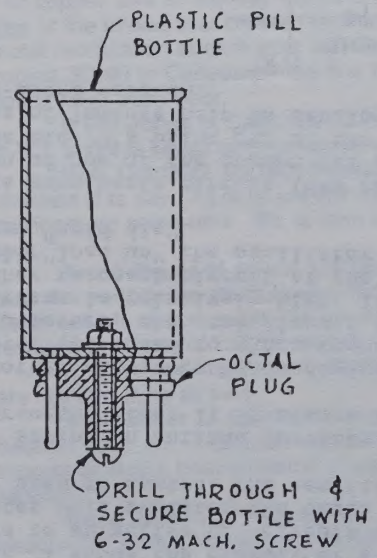

Fig. 3
Homemade Plug-in Coil

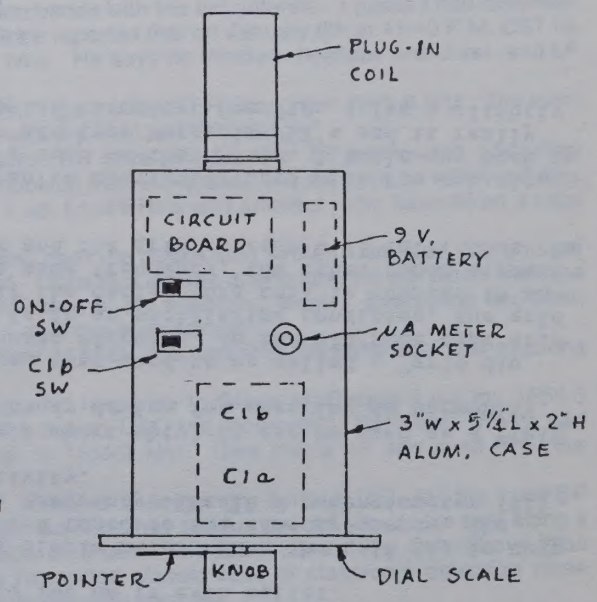

Fig. 4
Gate Dip Meter Layout

Fig. 4 is a suggested layout for the Gate Dip Meter, however it can be tailored to suit your own requirements and junk box supply depot.

I might mention that my meter draws a little over 100 μA with a 9 volt battery.

Manufactured plug-in coils are hard to find, but they and associated sockets are available from Modern Radio Laboratories, P.O. Box 14902, Minneapolis, MN 55414 and Kelvin Electronics, 7 Fairchild avenue, Plainview, NY 11803.